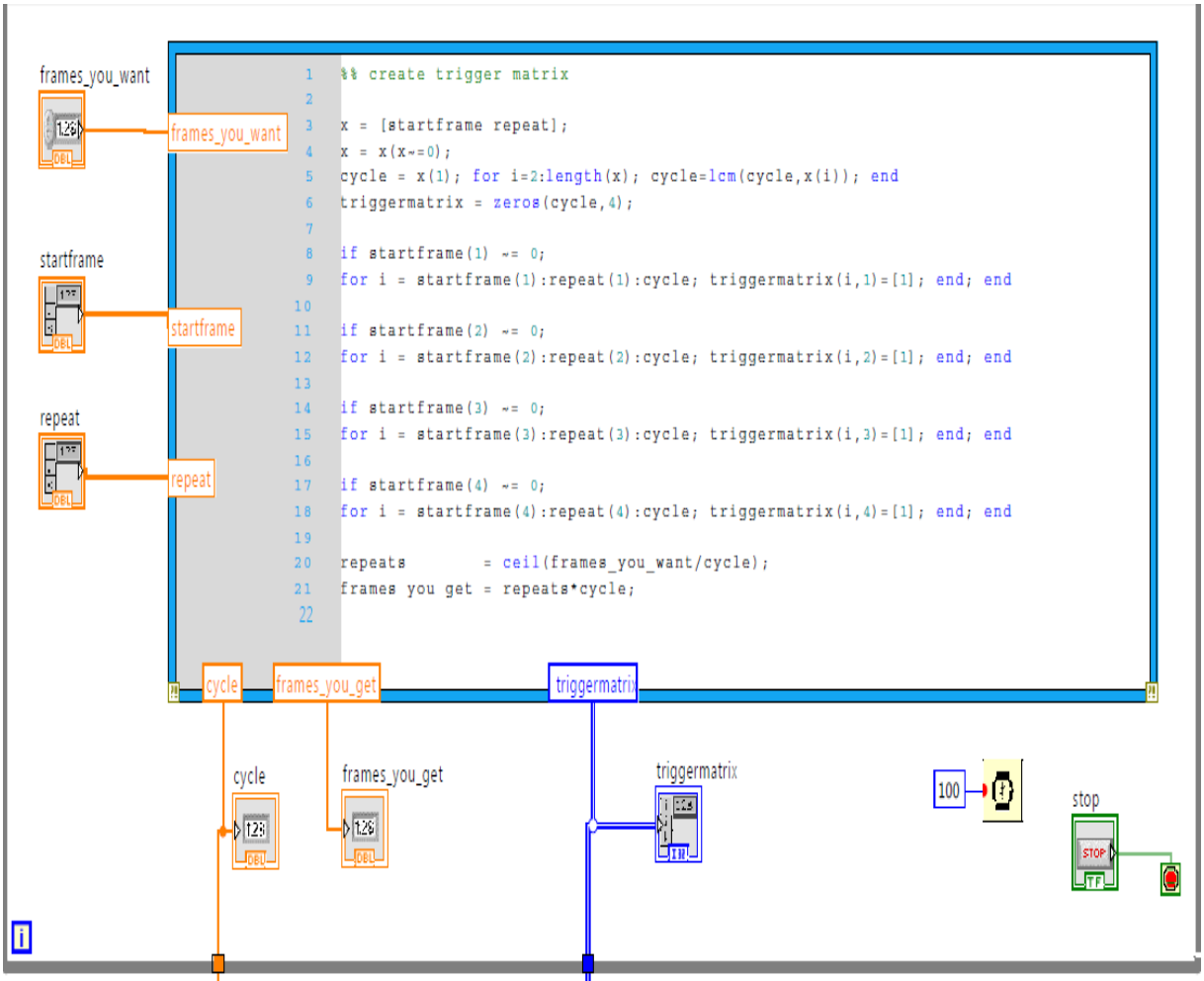
frames_you_want
startframe
repeat
%% create trigger matrix
x = [startframe repeat];
x = x(x~=0);
cycle = x(1); for i=2:length(x); cycle=lcm(cycle,x(i)); end
triggermatrix = zeros(cycle,4);
if startframe(1) ~= 0;
for i = startframe(1):repeat(1):cycle; triggermatrix(i,1)=[1]; end; end
if startframe(2) ~= 0;
for i = startframe(2):repeat(2):cycle; triggermatrix(i,2)=[1]; end; end
if startframe(3) ~= 0;
for i = startframe(3):repeat(3):cycle; triggermatrix(i,3)=[1]; end; end
if startframe(4) ~= 0;
for i = startframe(4):repeat(4):cycle; triggermatrix(i,4)=[1]; end; end
repeats = ceil(frames_you_want/cycle);
frames_you_get = repeats*cycle;
cycle
frames_you_get
triggermatrix
100
stop

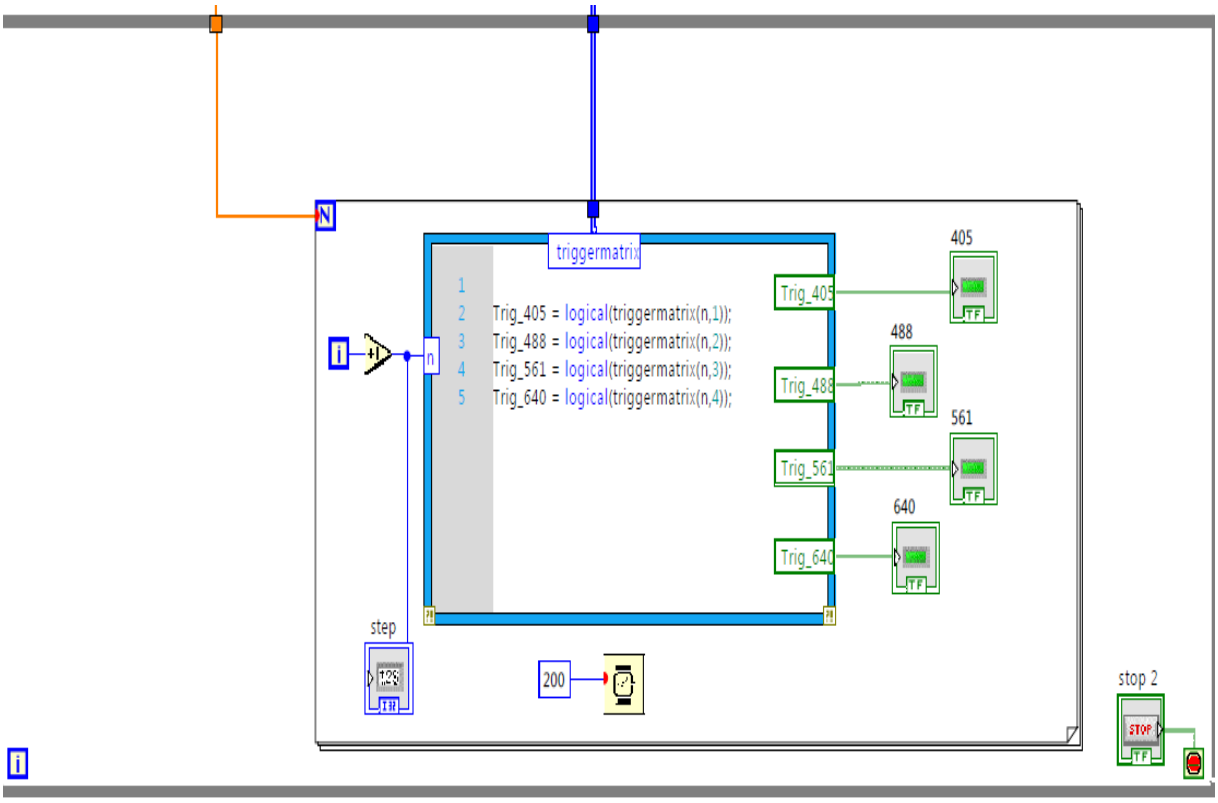
triggermatrix
Trig_405 = logical(triggermatrix(n,1));
Trig_488 = logical(triggermatrix(n,2));
Trig_561 = logical(triggermatrix(n,3));
Trig_640 = logical(triggermatrix(n,4));
Trig_405
Trig_488
Trig_561
Trig_640
405
488
561
640
step
200
stop 2